33-1 COOLING FANS

Refer to page 7-6 for Troubleshooting/Descriptions

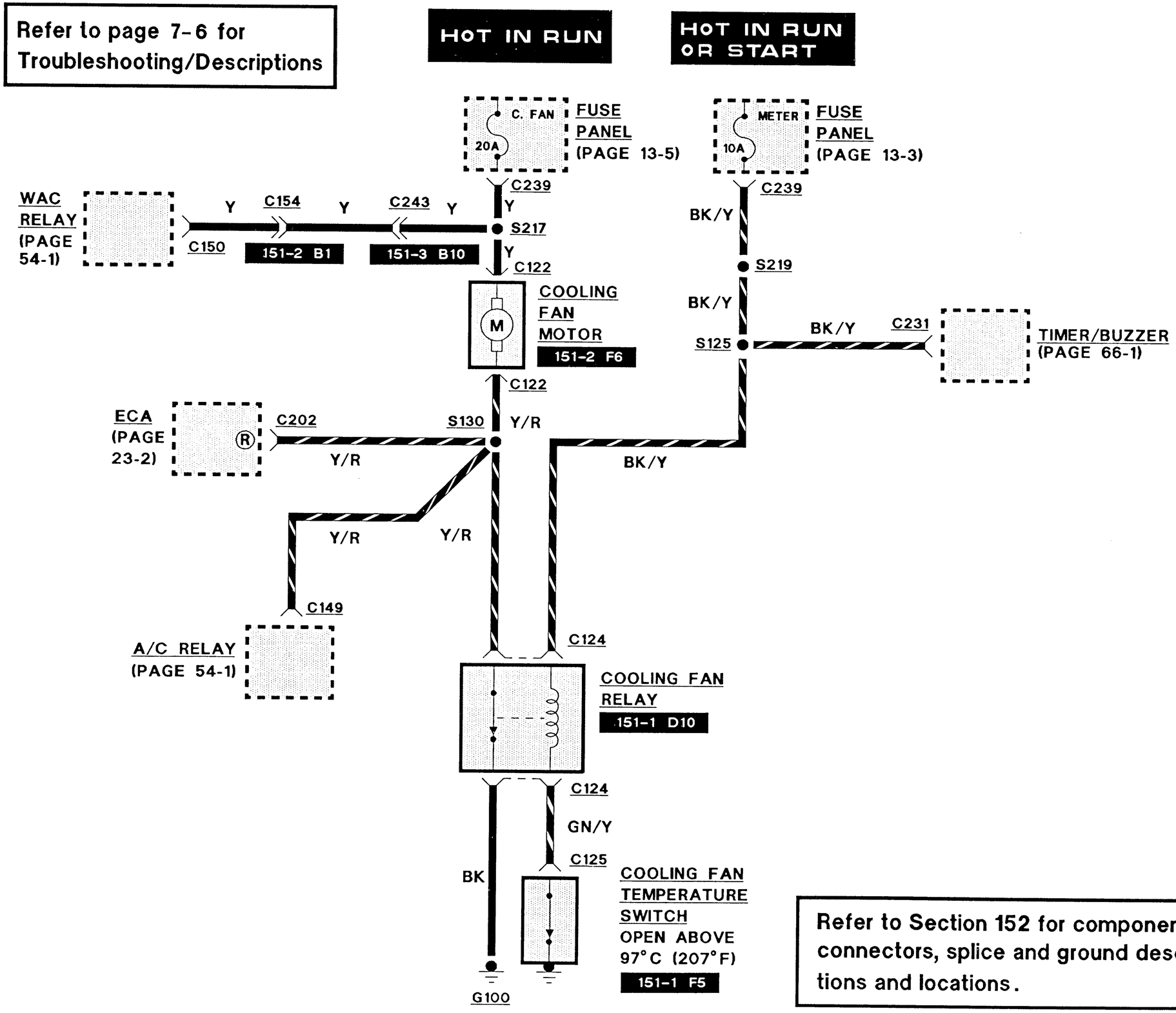

Refer to Section 152 for components, connectors, splice and ground descriptions and locations.

COMPONENT LOCATION VIEW 151-2

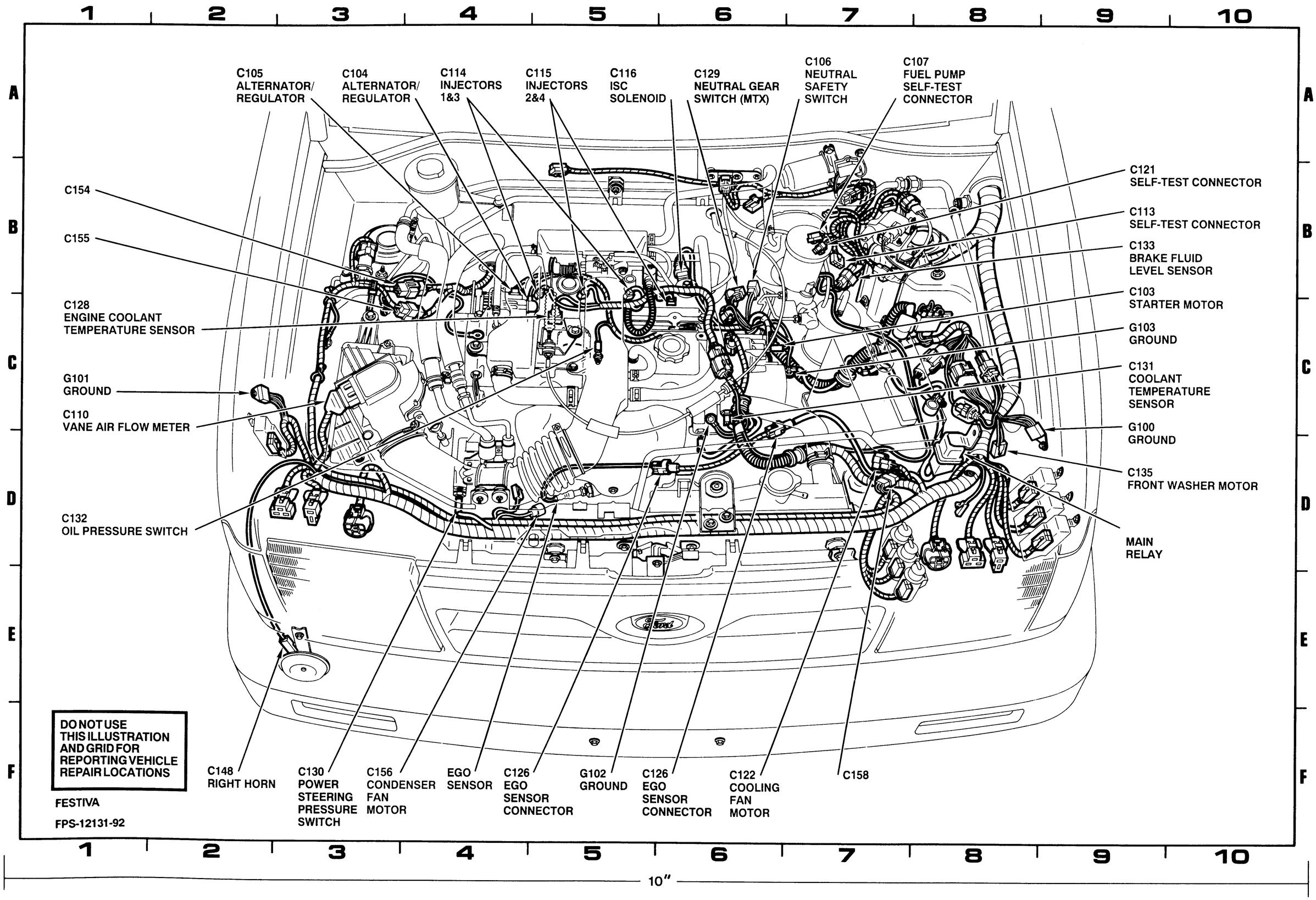

1.3L Engine (2of 2)

151-1 COMPONENT LOCATION VIEW

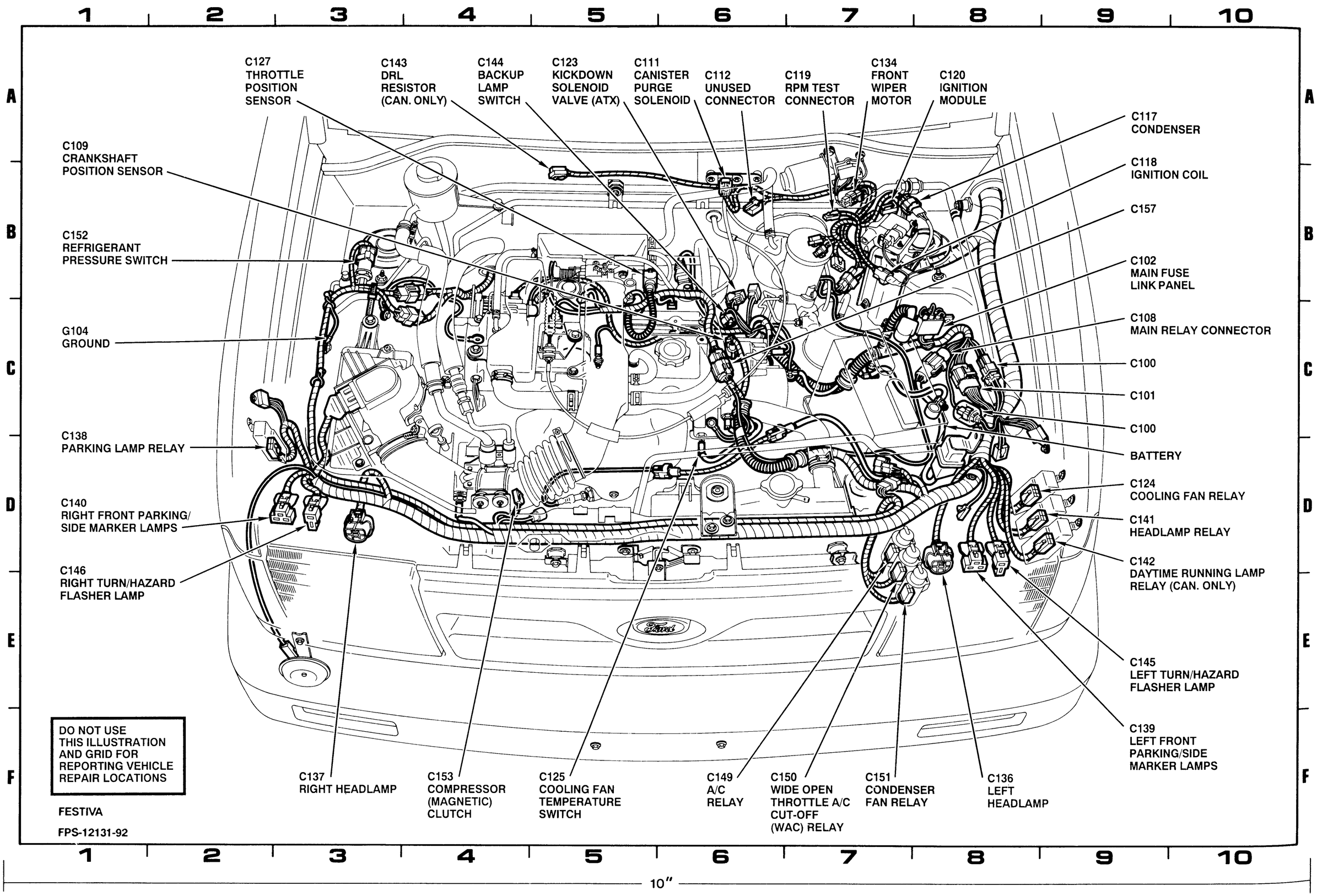

1.3L Engine (1of 2)

60-1 INSTRUMENT CLUSTER
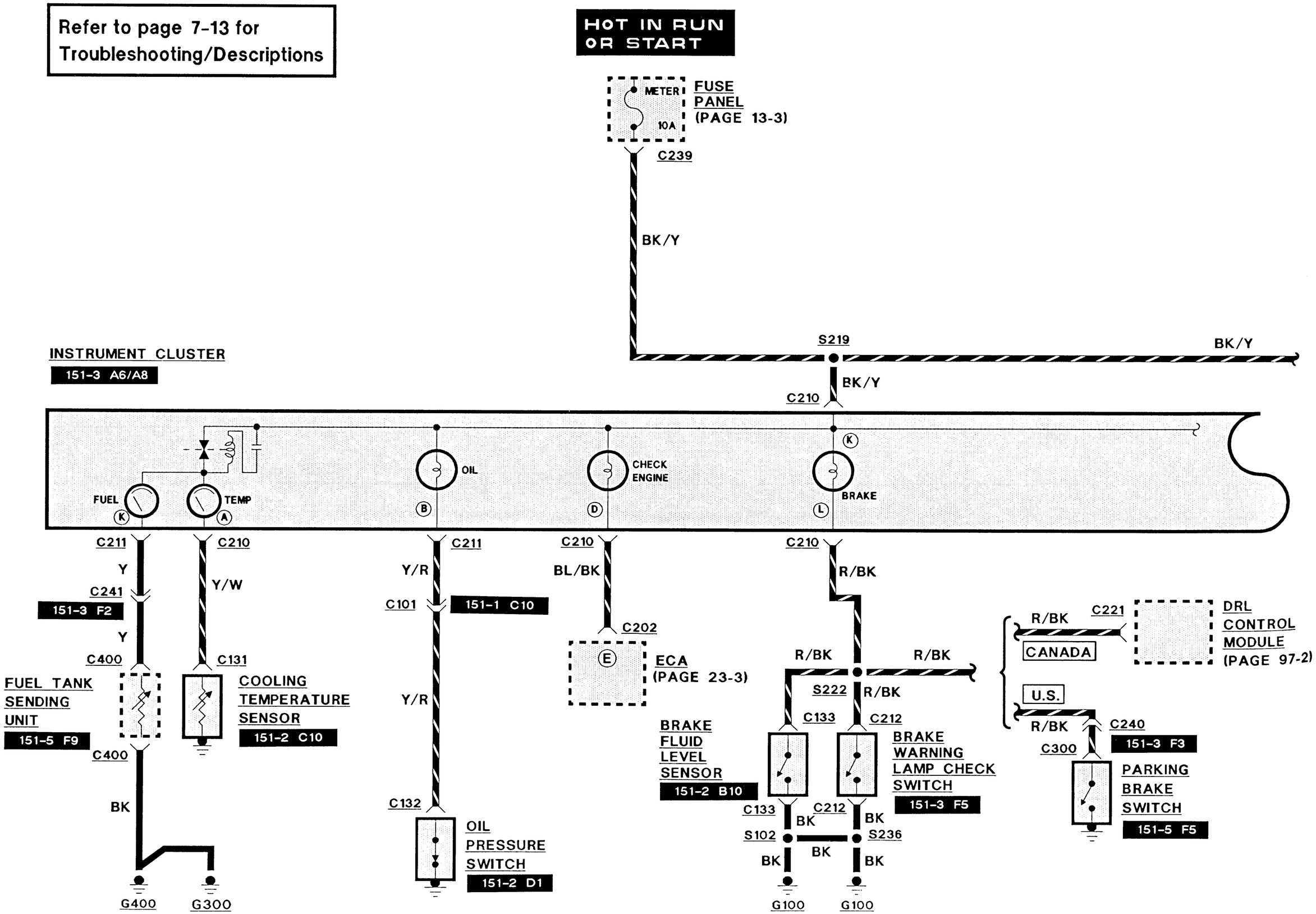
Refer to page 7-13 for Troubleshooting/Descriptions